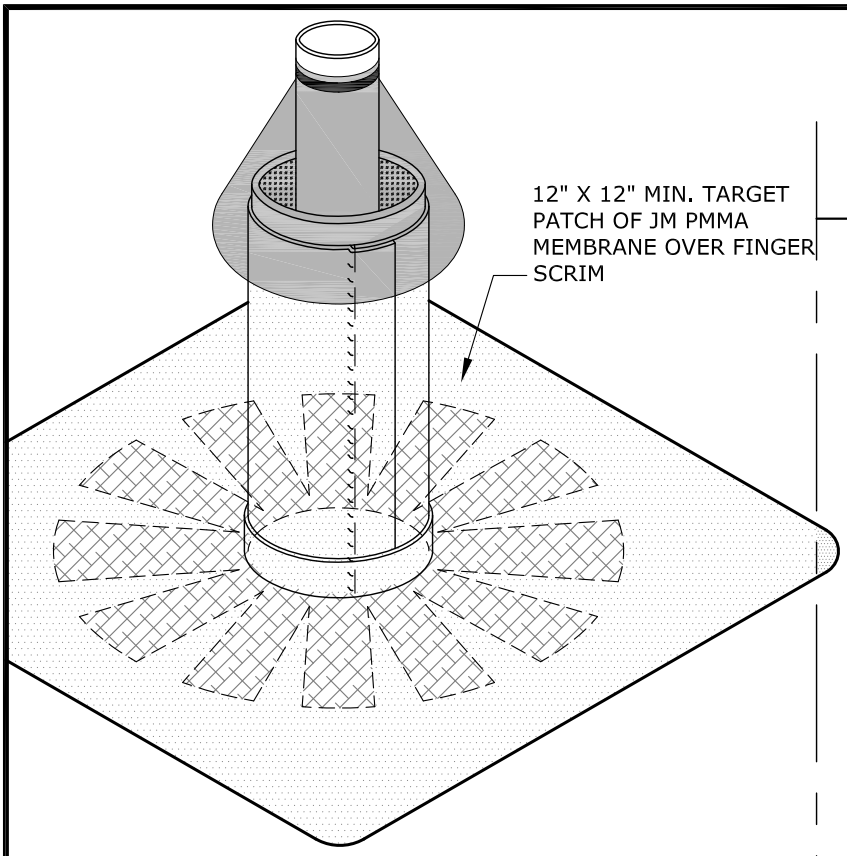

ISOMETRIC VIEW

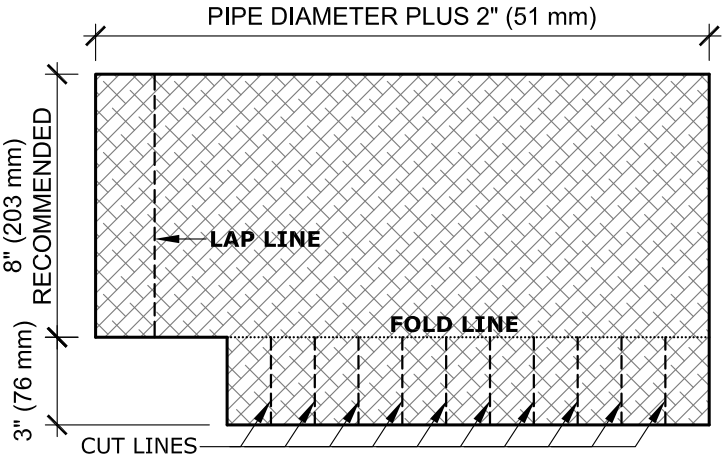

SCRIM FINGER CUTS

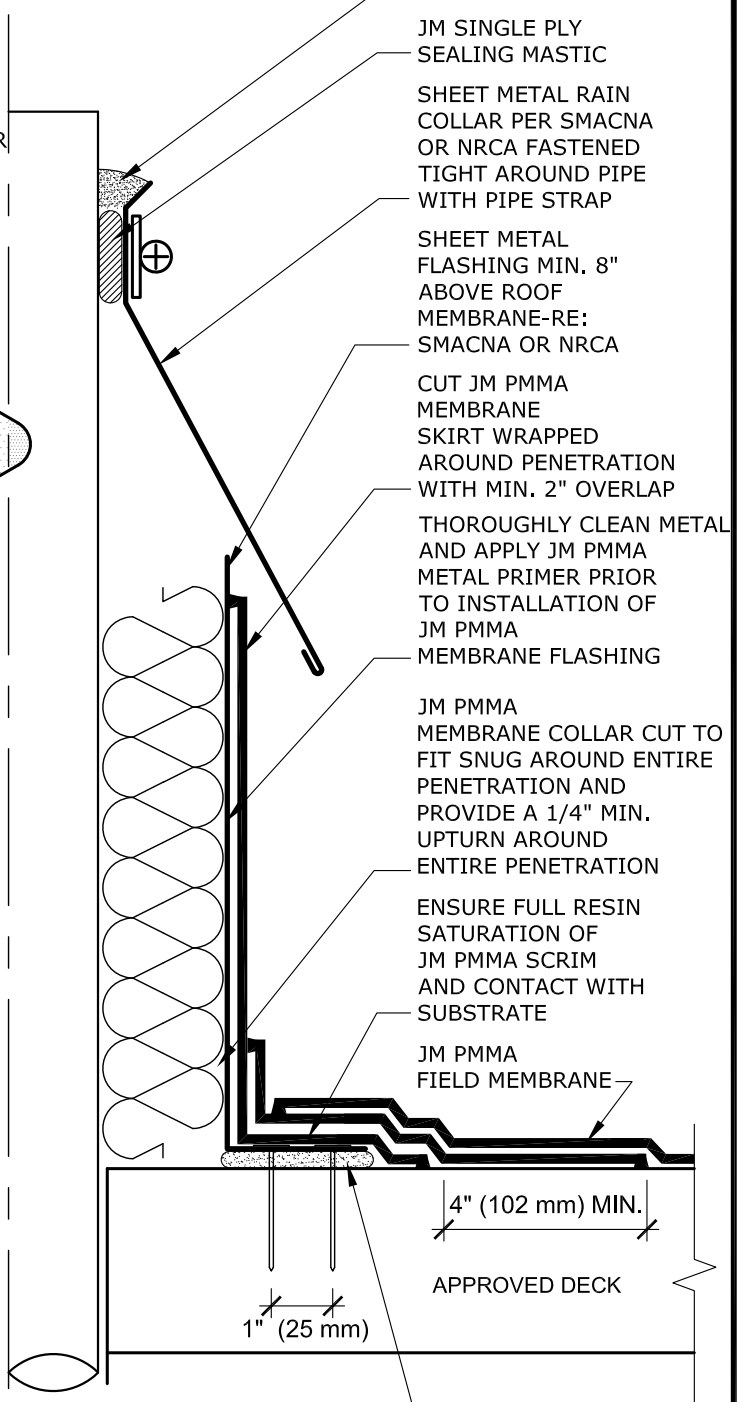

NOTES:

1. REFER TO JOHNS MANVILLE WEBSITE (www.jm.com) FOR MOST UP-TO-DATE INFORMATION.
2. PLEASE SEE JM PMMA FLASHING SPECIFICATIONS FOR A FULL DESCRIPTION OF INSTALLATION INSTRUCTIONS AND REQUIREMENTS WHICH ARE CONSIDERED A PART OF THIS DETAIL.
3. ANY CARPENTRY OR METAL WORK SHOULD BE DESIGNED AND CONSTRUCTED IN ACCORDANCE WITH LOCAL CODE REQUIREMENTS AND/OR PROJECT SPECIFICATIONS. THESE COMPONENTS SHOULD BE REVIEWED AND APPROVED BY A LICENSED DESIGN PROFESSIONAL.
4. JM PMMA MEMBRANE FLASHING CONSISTS OF JM PMMA FLASHING RESIN, JM PMMA SCRIM, JM PMMA FLASHING RESIN. USE THE APPROPRIATE JM PMMA PRIMER DEPENDING ON TYPE OF SUBSTRATE.
5. ALL SEALANTS / CAULKING SHALL BE PERIODICALLY INSPECTED AND MAINTAINED BY THE BUILDING OWNER THROUGHOUT THE LIFE OF THE ROOF.

DRAWING NO.	INSULATED PIPE PENETRATION FLASHING	
L-FP-02 DRAINS & VENTS	MEMBRANE TYPE: JM PMMA	Johns Manville is a manufacturer of commercial roofing products and offers this general conceptual information to you as a courtesy for general educational purposes only. This complimentary assistance is not to be either used or relied upon by anyone as a substitute for professional engineering design and documentation required by any building code, contract, or applicable law. By accepting the general conceptual information, you agree it does not constitute any representations, endorsements of, or an assumption by Johns Manville of any duty or liability for either the adequacy of the design of a building, any of its components or the sufficiency of any construction.
SCALE N.T.S / ISSUE DATE 04-10-24	MAXIMUM GUARANTEE TERM: 20 YEAR	

Johns Manville